ADHESIVE PAPER
ELECTRIC INSECT KILLERS

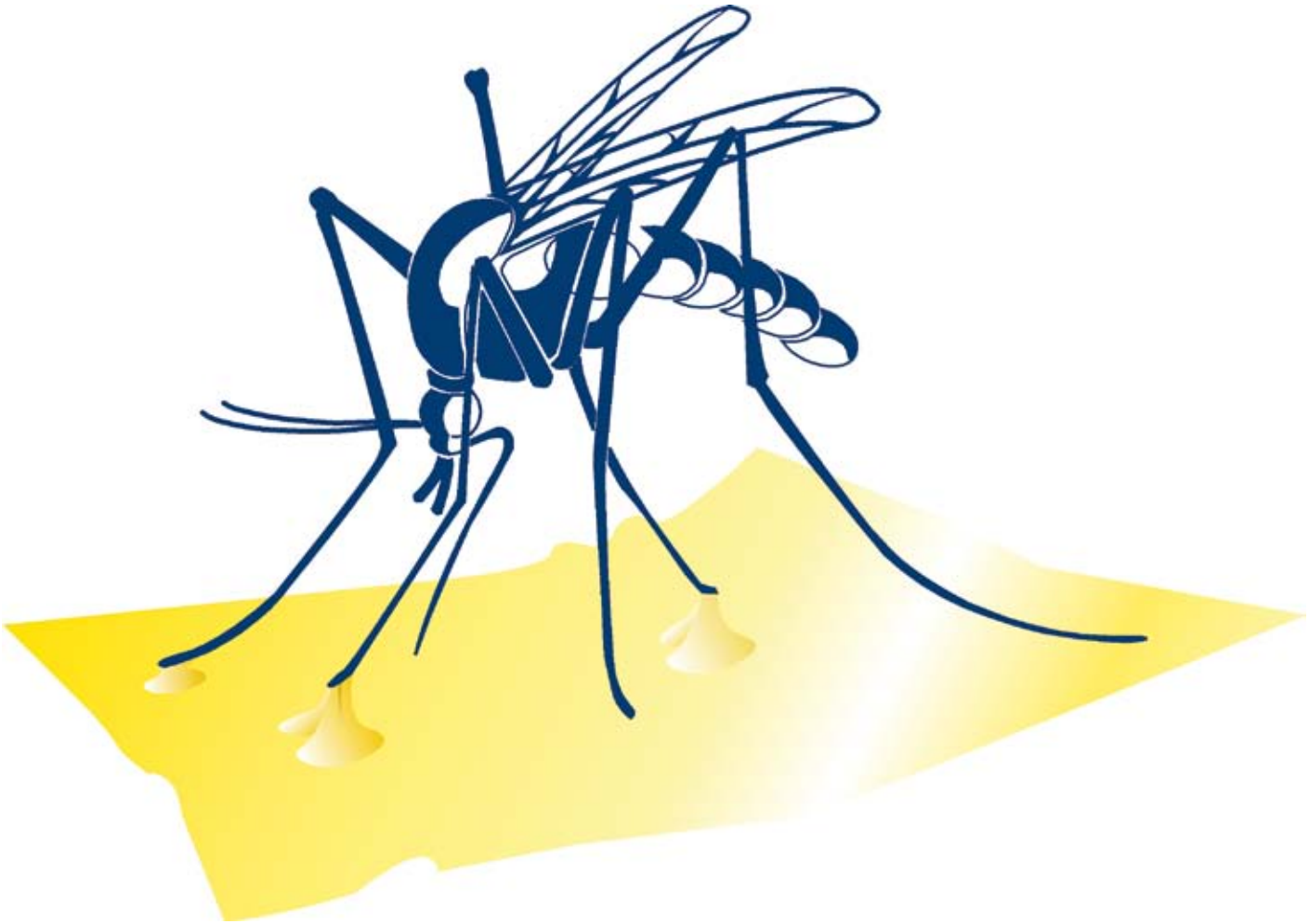

WHAT IS HACCP?

CONSTANT PROTECTION AND CONTROL

THE HARMFUL EFFECTS OF INSECTS

To avoid every kind of contamination it is necessary to take drastic action against flying insects, such as flies and midges, whose larvae feed on decomposing organic matter. During growth the insects come into contact with pathogenic agents that are extremely harmful to humans: Streptococci, which cause infections of the skin and intestine, Campylobacter, which causes dangerous intestinal infections, Chlamydia, a parasite that nests inside organisms causing serious harm, and Klebsiella, which causes infection of the urinary tracts and respiration.

Just as harmful are insects such as the flour beetle, the Trogoderma (warehouse beetle), the Tigola and the bread weevil, which are harmful to foodstuffs.

It is thus necessary to implement proper protection against insects through constant monitoring and control of the critical areas.

SOLUTIONS IN ACCORDANCE WITH THE LAW

EFFICIENCY OF UV-A LAMPS

Among the solutions offered, the most effective is the UV-A light electric insect killer, which exploits the attractive properties of UV-A rays to insects without harming humans. In order to be noticed by the insects' orientation system, UV-A lamps need to provide an extremely precise emission frequency, and for this reason it is important to replace the lamps after a year of use, to avoid the system becoming ineffective. It is essential to use our original MO-EL replacements.

UV-A LAMPS

Mercury vapour lamps at low pressure made from a tubular glass housing containing two electrodes, with an internal fluorescent coating. They produce emissions in the ultraviolet range between 300 and 400 nm with a peak of 365 nm.

TO INCREASE THE EFFICIENCY OF THE LIGHT TRAP

To supplement the lamps, MO-EL has produced a complete range of special adhesive papers, with a dot formation to facilitate monitoring. When combined with aromatic adhesive papers, these papers enable the capture of insects to be particularly selective.

WHAT IS HACCP?

HACCP (Hazard Analysis Critical Control Points) is a hygienic means of controlling and monitoring aimed at safeguarding the health of the consumer.

Italy has adopted the European standards (EEC Dir. no. 43/93) and made them operative by issuing Law decree no.155/97, which contains the rules to observe and requires the application of the HACCP methodology.

WHERE IT APPLIES

Every productive process has its 'critical points', and for each of these controls exist which, by law, need to be implemented systematically in order to discover the causes of any particular problem. The HACCP method is based on scientific criteria and offers several advantages:

- It enables food contamination risks to be identified and prevented;
- It facilitates inspections by the authorities;
- It encourages honest and transparent competition, having consumer satisfaction as its objective. The HACCP system applies to the whole process and not just to the control of the finished product.

BUSINESS CATEGORIES COVERED BY THE STANDARD

All food businesses which carry out production, preparation, processing, manufacture, packaging, storage, transport, distribution, handling, sale, supply, or provision to the consumer.

For example:

- restaurants
- bars, confectioners
- food, fruit and vegetable resellers
- grocers, delicatessens
- butchers, fishmongers
- bakers
- chemists.

MO-STICK
mod. 372

03 | 15-18 m | IP65 | INOX AISI 304

SHATTERPROOF LAMPS
TWO POSSIBLE FIXING METHODS

1- Operates discreetly without making any noise

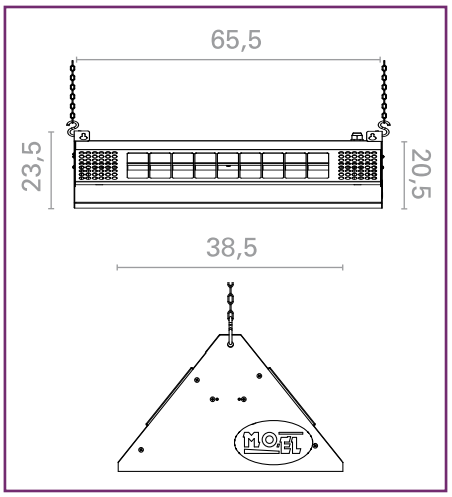

Produced specifically for large business areas needing the greatest environmental hygiene.

CONSTRUCTION
The product is made entirely from AISI 304 stainless steel, welded and treated for use in food preparation areas. To ensure it is completely impermeable to water, dust and steam the model is supplied with watertight lamp holders, rubber cable and plug with watertight cable carrier, and a seal between body and cover. MO-STICK is a trap which enables monitoring of captured insects and can also be used in environments that have slightly inflammable atmospheres, such as sugar refineries and wine shops. Extremely easy to clean by applying a jet of water and replacing the adhesive papers. The clean, stilish design makes it a decorative, silent and discreet object that hides the insects from view. MO-STICK can be hung from the ceiling with 2 practical small chains, fixed to the wall or simply stood in place.

LAMPS
The 2 powerful 40W UV-A lamps mounted on the watertight lampholder are supplied with a shatterproof sheath for protection of the tube: should the glass break, it does not get scattered, and the phosphides in the lamp do not escape. The sheath is totally transparent to UV-A rays.

SAFETY
The model is IMQ approved, has IP65 protection rating and complies with CE standards.

TECHNICAL SPECIFICATIONS	
Dimensions in mm	655x390x235 mm (H)
Weight	8.8 kg
Voltage rating	230V/50Hz
Total power consumption	95W
UV-A lamps	2x40W shatterproof
Duration of lamps	2000 h
Power cable	Neoprene
Protection level	IP65
Standard accessories	Small chain - adhesive paper

SPARES	
000788	40W shatterproof lamp
001625	pack of 10 adhesive papers

MO-STICK
art. 397

SHATTERPROOF LAMPS
TWO FIXING METHODS

1- Operates discreetly without making any noise

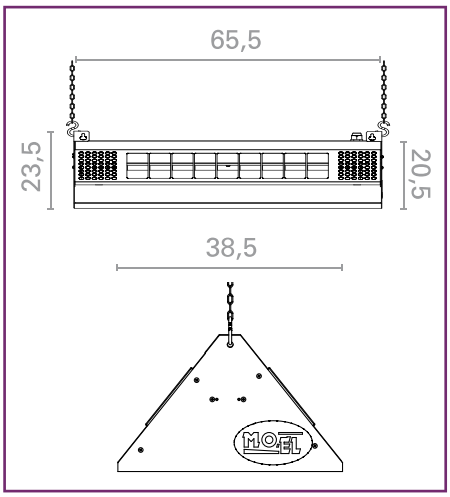

Produced specifically for large business areas needing the greatest environmental hygiene.

PLACEMENT

The lamps must be installed away from principal light sources (windows etc.) and away from strong draughts which could disturb the flight of the insects.
Avoid installing the MO-STICK near to production areas; the aim is to attract the insects away from these areas.
The ideal position is between entrances and production areas so as to catch the insects before they reach critical production points.

TECHNICAL SPECIFICATIONS	
Dimensions in mm	655x390x235 mm (H)
Weight	8.8 kg
Voltage rating	230V/50Hz
Total power consumption	95W
UV-A lamps	2x40W shatterproof
Duration of lamps	2000 h
Power cable	Neoprene
Protection level	IP65
Standard accessories	Small chain - adhesive paper

SPARES	
000788	40W shatterproof lamp
001625	pack of 10 adhesive papers

MO-BUTTERFLY
mod. 700

THREE FIXING METHODS

1- Operates discreetly without making any noise

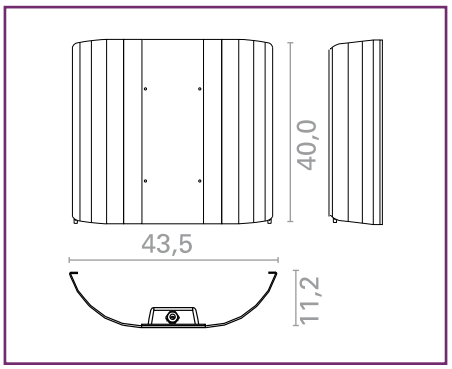

This electrical appliance was made in compliance with HACCP Directive Hazard Analysis Critical Control Points (CE 93/43-96/3-LD 155/97). The special UV-A lamps are positioned so as to attract all flying insects towards the appliance. When the insects approach, they become stuck to the adhesive paper which is supplied as a replacement item. This system allows the control and elimination of all flying insects in the surrounding area.

CONSTRUCTION AND INSTALLATION

MO-Butterfly is made completely from aluminium and is therefore designed for use in areas of food production. The adhesive paper is replaced in seconds allowing for easy and swift cleaning. The equipment can be installed on a front wall, back wall or on the ceiling.

LAMPS

Two high output UV-A lamps are supplied with a combined power rating of 30W and an operating range of about 10-12 metres.

SAFETY

The electrical part of the unit including the actinic UV lamps is completely insulated and protected by an unbreakable transparent cover to ensure maximum safety and maximum care for hygienic and sanitary standards. IP65 protection rating

TECHNICAL SPECIFICATIONS	
Dimensions in mm	112x435x400 mm (H)
Weight	2.5 kg
Voltage rating	230V/50HZ
Total power consumption	40W
UV-A lamps	2x15 W
Material	Alluminium-PMMA
Effective range	10-12 metres
Protection level	IP65
Adhesive paper supply	34.5x17 cm

SPARES	
0415	15W lamp
002413	pack of 10 adhesive papers

MO-FLY
mod. 701

1- Operates discreetly without making any noise

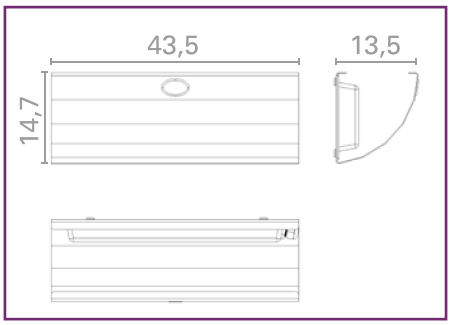

This electrical appliance was made in compliance with HACCP Directive Hazard Analysis Critical Control Points (CE 93/43-96/3-LD 155/97). This system allows the control and elimination of all flying insects in the surrounding area.

CONSTRUCTION AND INSTALLATION
The interaction of the UV-A lamps and the adhesive paper is the only system that allows for monitoring of the insects. The adhesive paper prevents fragmentation of the insect and hence the spread of bacteria. All this makes MO-FLY an ideal solution for insect control.

LAMPS
Two high output UV-A lamps are supplied with a combined power rating of 30W and an operating range of about 10-12 metres.

SAFETY
The model has IP65 protection rating and complies with CE standards. The electrical part of the unit including the actinic UV lamps is completely insulated and protected by an unbreakable transparent cover to ensure maximum safety and maximum care for hygienic and sanitary standards

TECHNICAL SPECIFICATIONS	
Dimensions in mm	400x147x135 mm (H)
Weight	2.2 kg
Voltage rating	230V/50Hz
Total power consumption	40W
UV-A lamps	2x15 W
Material	Aluminium-PMMA
Effective range	10-12 metres
Protection level	IP65
Adhesive paper supply	34.5x17 cm

SPARES	
0415	15W lamp
002413	pack of 10 adhesive papers

MO-PLICK
mod. 399

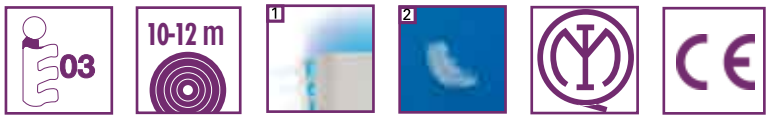

1- Fully washable by virtue of its complete polishability
2 - Operates discreetly without making any noise

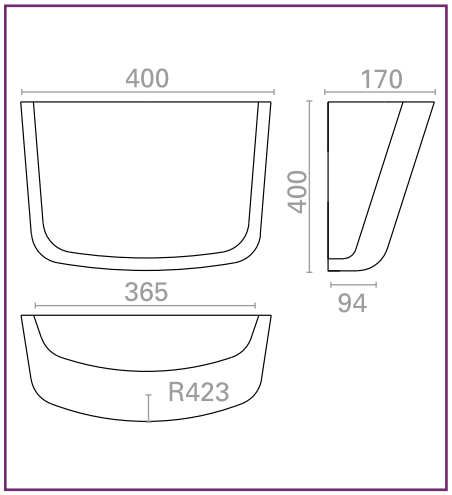

Adhesive paper insect killer made for environments that need to combine an effective means of fighting harmful insects with aesthetically pleasing appliances.
For installation without power cable.

CONSTRUCTION AND LAMPS

The complete polishability of MO-PLICK enables its use in public places, offering easy and quick cleaning.
The outside casing is removed with a simple action and the adhesive paper is replaced in seconds.
Supplied with a high quality UV-A lamp with a power of 20W and an effective range of about 10-12 metres. The model complies with CE standards and is IMQ approved.

TECHNICAL SPECIFICATIONS	
Dimensions in mm	400x170x350 mm (H)
Weight	1,4 kg
Voltage rating	230V/50Hz
Total power consumption	20W
UV-A lamps	1x20W
Material	Polystyrene
Effective range	50 m²
Standard accessories	Adhesive paper

SPARES	
001932	20W Edison lamp
002413	pack of 10 adhesive papers

MO-PLICK
mod. 398

1- Operates discreetly without making any noise

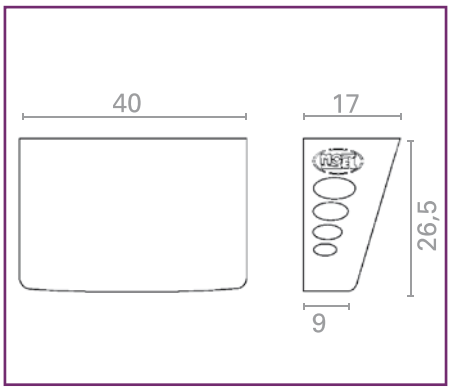

Adhesive paper insect killer made for environments that need to combine an effective means of fighting harmful insects with aesthetically pleasing appliances.

CONSTRUCTION

The outside casing, made from 1.2mm thick stainless steel, is removed with a simple action and the adhesive paper is replaced in seconds, offering easy and quick cleanliness.

LAMPS

A high quality UV-A lamp is with a power rating of 20W and an operating range of about 10-12 metres.

SAFETY

The model complies with CE standards and is IMQ approved. It complies with current HACCP standards for food environments.

TECHNICAL SPECIFICATIONS	
Dimensions in mm	400x170x270 mm (H)
Weight	2,9 kg
Voltage rating	230V/50Hz
Total power consumption	20W
UV-A lamps	1x20 W
Material	inox
Effective range	10-12 mt
Standard accessories	Carta adesiva

SPARES	
001932	20W edison lamp
002413	pack of 10 adhesive papers

RED DECÒ
mod. 709

AVAILABLE FROM MARCH 2008

NEW

This model is made with special UV-A lamps, designed to attract all flying insects towards the appliance. When the insects approach, they remain stuck to the adhesive paper which is supplied as a replacement item. An innovative project which combines beauty of form with practical requirements giving elegant and dynamic solutions.
In a few words: design and practicality above all. This is the philosophy behind the new Decò lamp.

CONSTRUCTION AND INSTALLATION
The interaction of the UV-A lamps and the adhesive paper is the only system that allows for monitoring of the insects. The adhesive paper prevents fragmentation of the insect and hence the spread of bacteria. All this makes Decò an ideal solution for insect control.

LAMPS
Supplied with a high quality UV-A lamp with a power rating of 20W and an operating range of about 10-12 metres. The model complies with CE standards.

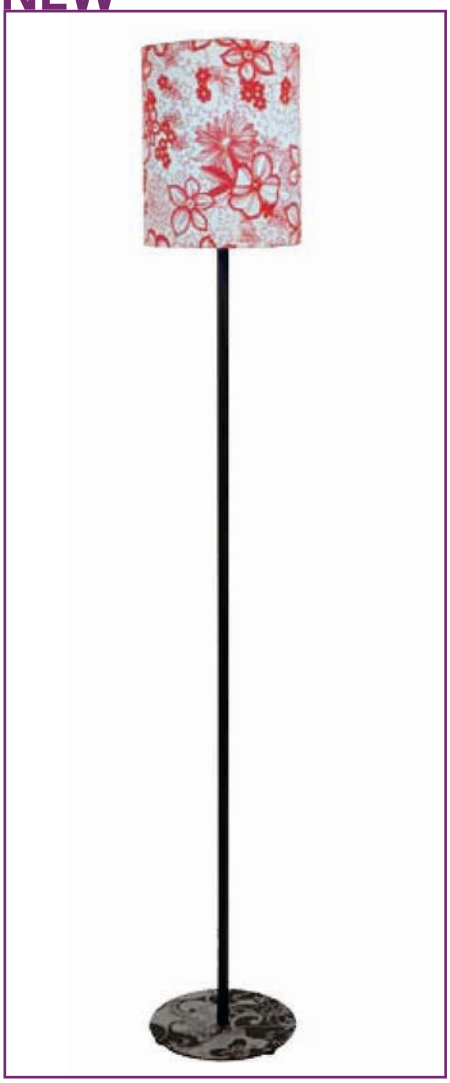

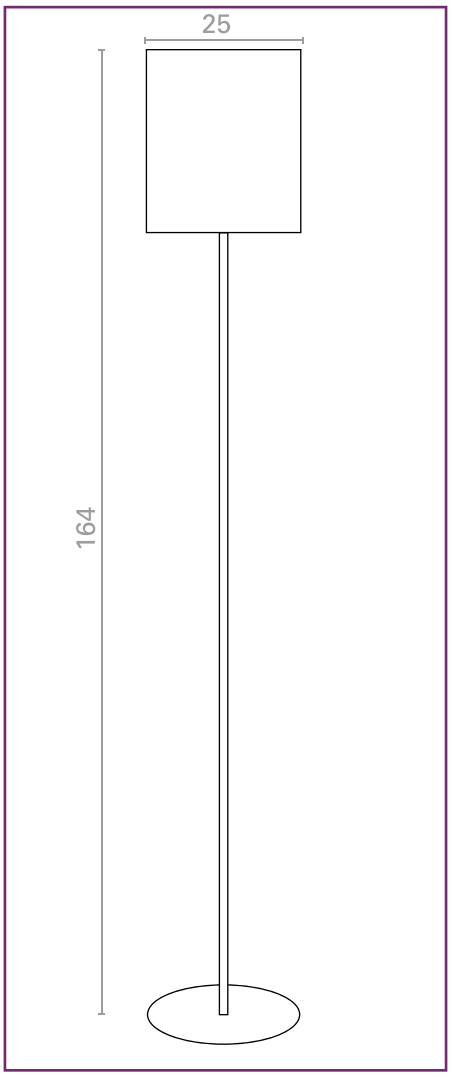

SPARES	
001932	20W edison lamp

TECHNICAL SPECIFICATIONS	
Dimensions in mm	1640mm (H) and 250mm diameter
Weight	2.75 kg
Voltage rating	230V/50Hz
Total power consumption	20W
UV-A lamps	1x20W
Effective range	10-12 metres
Standard accessories	Adhesive paper

BLACK DECO'
mod. 710

10-12 m

CE

AVAILABLE FROM MARCH 2008

Elegant, innovative design that makes a product unique on the market and immediately recognisable by the consumer on entering the store. This was the leitmotiv for the design of the new Decò lamp. The lamp features close matching of floral fantasies and cool colours. This system allows for the control and elimination of all flying insects in the surrounding area, maintaining the functionality of the appliance while at the same time furnishing the surroundings with a piece of ornamental design.

CONSTRUCTION AND INSTALLATION

The interaction of the UV-A lamps and the adhesive paper is the only system that allows for monitoring of the insects. The adhesive paper prevents fragmentation of the insect and hence the spread of bacteria. All this makes Black Decò an ideal solution for insect control.

LAMPS

Supplied with a high quality UV-A lamp with a power rating of 20W and an operating range of about 10-12 metres. The model complies with CE standards.

NEW

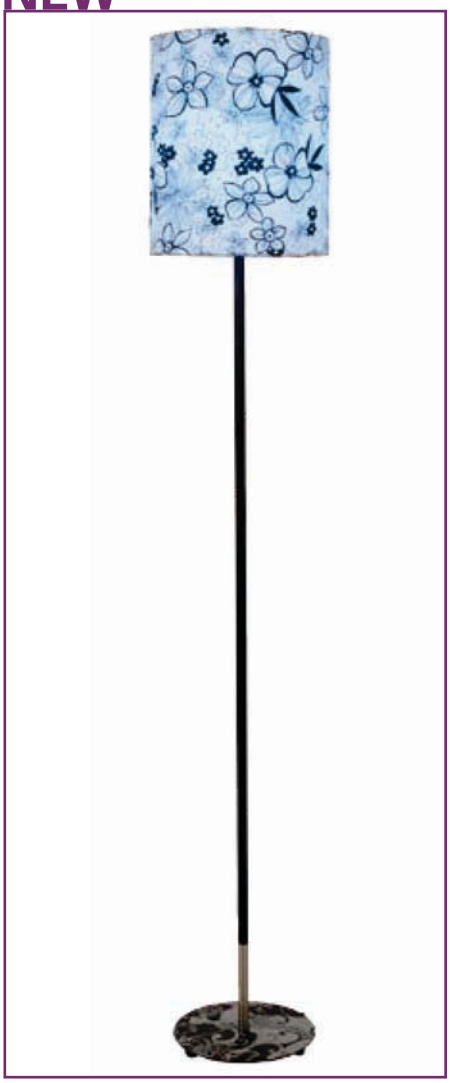

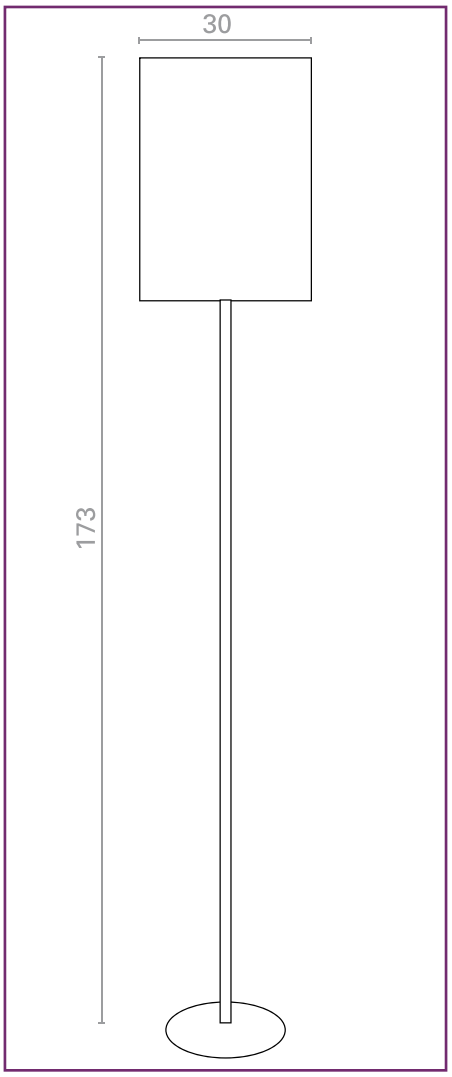

SPARES	
001932	20W edison lamp

TECHNICAL SPECIFICATIONS	
Dimensions in mm	1730mm (H) and 300mm diameter
Weight	2.80 kg
Voltage rating	230V/50Hz
Total power consumption	20W
UV-A lamps	1x20W
Effective range	10-12 metres
Standard accessories	Adhesive paper

ADHESIVE PAPER ELECTRIC INSECT KILLERS - TECHNICAL SPECIFICATIONS

Code	**372**	**397**	**700**	**701**	**399**	**398**
Dimensions in cm	655x390x235 mm (H)	655x390x235 mm (H)	112x435x400 mm (H)	400x147x135 mm (H)	400x170x350 mm (H)	400x170x270 mm (H)
Weight	8.8 kg	8.8 kg	2.5 kg	2.2 kg	1.4 kg	2.9 kg
Input voltage	230V/50HZ	230V/50HZ	230V/50HZ	230V/50HZ	230V/50HZ	
Total power consumption	95W	95W	40W	40W	20W	20W
UV-A lamps	2x40W anti-shatter	2x40W anti-shatter	2x15 W	2x15 W	1x20W	1x20W
Duration of lamps	2000 h	2000 h	2000 h	2000 h	2000 h	2000 h
Material	Stainless steel AISI 304	Painted steel	Aluminium-plexiglass	Aluminium-plexiglass	Polystyrene	Stainless steel AISI 304
Power cable	Neoprene	Neoprene	Neoprene	Neoprene	-	-
Standard accessories	Small chain - Adhesive paper	Small chain - Adhesive paper	Small chain - Adhesive paper	Small chain - Adhesive paper	Adhesive paper	Adhesive paper
Adhesive paper dimensions	370x650	370x650	200x345	200x345	200x345	200x345
Protection level	IP65	IP65	IP65	IP65	⧈	⧈
Coverage	**15-18 m.**	**15-18 m.**	**12-14 m.**	**12-14 m.**	**10-12 m.**	**10-12 m.**

DECO' - TECHNICAL SPECIFICATIONS

Code	**709**	**710**
Dimensions in cm	1640 mm (H) and 250 mm diameter	1730 mm (H), 300 mm diameter
Weight	2.75 kg	2.80 kg
Input voltage	230V/50Hz	230V/50Hz
Total power consumption	20W	20W
UV-A lamps	1x20W	1x20W
Coverage	10-12 m.	10-12 m.
Standard accessories	Adhesive paper	Adhesive paper

ELECTRIC SHOCK INSECT KILLERS - TECHNICAL SPECIFICATIONS

Code	**308A**	**308E**	**307A**	**307E**	**305E**	**309**	**304**
Dimensions in cm	685x200x380 mm (H)	685x200x380 mm (H)	685x200x380 mm (H)	685x200x380 mm (H)	655x390x235 mm (H)	355x155x315 mm (H)	355x155x315 mm (H)
Weight	8.6 kg	8.6 kg	8 kg	8 kg	7.5 kg	4.2 kg	4.1kg
Input voltage	230V/50HZ	230V/50HZ	230V/50HZ	230V/50HZ	230V/50HZ	230V/50HZ	230V/50HZ
Output voltage	5000 V	5000 V	5000 V	5000 V	5000 V	5000 V	5000 V
Total power consumption	95W	95W	65W	65W	45W	45W	35W
Type of UV-A lamp	2x40W	2x40W	2x20W	2x20W	1x20W	2x15W	1x15W
Duration of lamps	2000 h	2000 h	3000 h	3000 h	3000 h	1500 h	1500 h
Standard accessories	Small chain	Small chain	Small chain	Small chain	Small chain	Small chain	Small chain
Protection level	IPX4	IPX4	IPX4	IPX4	IPX4	IPX3	IPX3
Double insulation	-	⧈	-	⧈	⧈	⧈	⧈
Coverage	**15-18 m.**	**15-18 m.**	**12-15 m.**	**12-15 m.**	**12-14 m.**	**10-12 m.**	**8-9 m.**